Trade of Sheet Metalwork	
Module 4:	**General Sheet Metalwork**
Unit 10:	**On-Centre Square to Round**
	Phase 2

Table of Contents

List of Figures **4**

List of Tables **5**

Document Release History **6**

Module 4 – General Sheet Metalwork **7**

Unit 10 – On-Centre Square to Round 7
Learning Outcome: 7
Key Learning Points: 7
Training Resources: 7
Key Learning Points Code: 7

On-Centre Square to Round **9**

Self Assessment **11**

Answers to Questions 1-2. Module 4.Unit 10 ..... **12**

Index **13**

List of Figures

Figure 1 - On-Centre Square to Round 8

List of Tables

Document Release History

Date	Version	Comments
17/11/06	First draft	
09/04/14	2.0	SOLAS transfer

Module 4 – General Sheet Metalwork

Unit 10 – On-Centre Square to Round

Duration – 7 Hours

Learning Outcome:

By the end of this unit each apprentice will be able to:

- Organise the production sequence
- Mark out and fabricate on centre a square to round using the triangulation method

Key Learning Points:

D	Drawing and development of a central square to round.
Rk	Proper procedure for shaping and forming of transformer.

Training Resources:

- Toolkit
- Safety equipment and protective clothing
- Notepad
- Job card
- 0.6mm galvanised mild steel
- Tools and machinery/equipment

Key Learning Points Code:

M = Maths D= Drawing RK = Related Knowledge Sc = Science

P = Personal Skills Sk = Skill H = Hazards

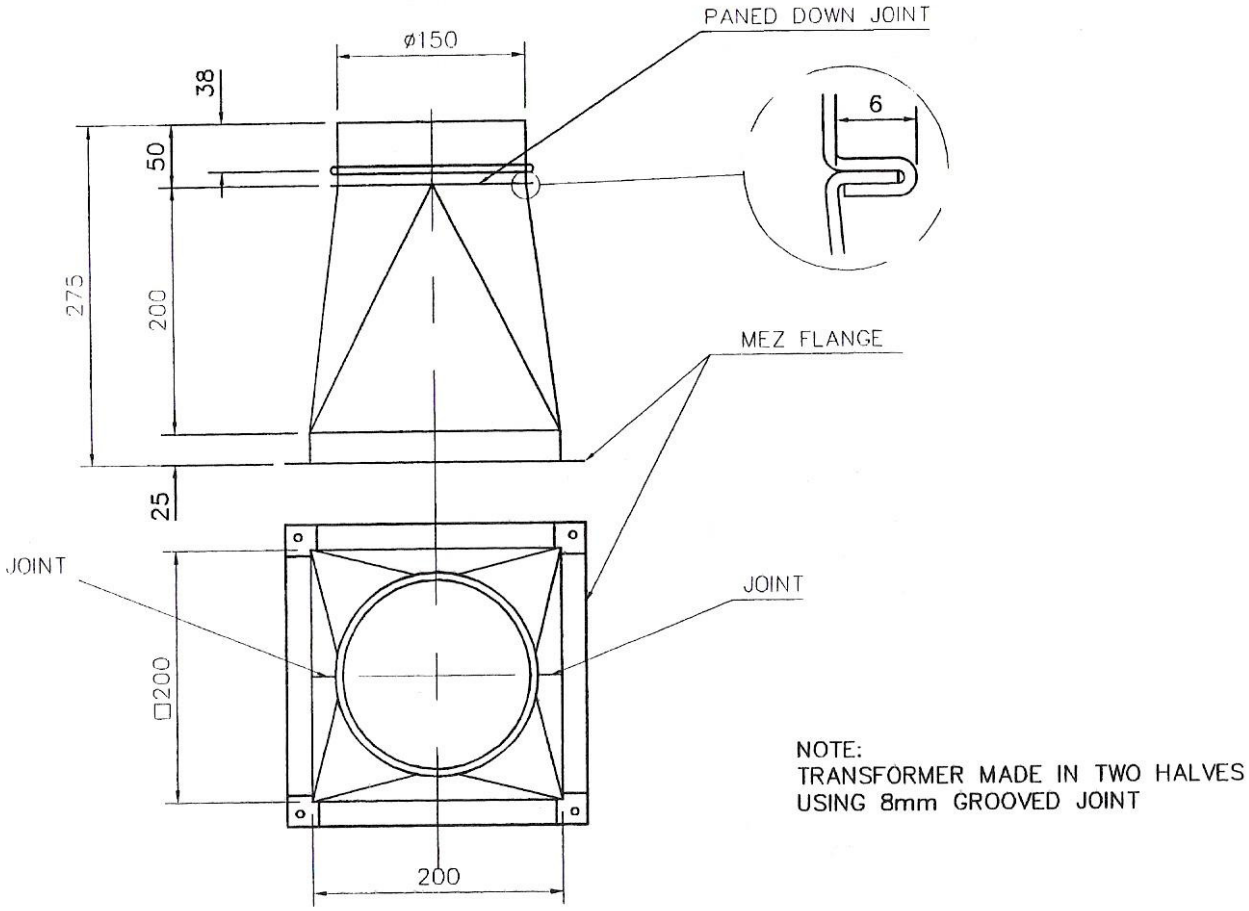

Figure 1 - On-Centre Square to Round

On-Centre Square to Round

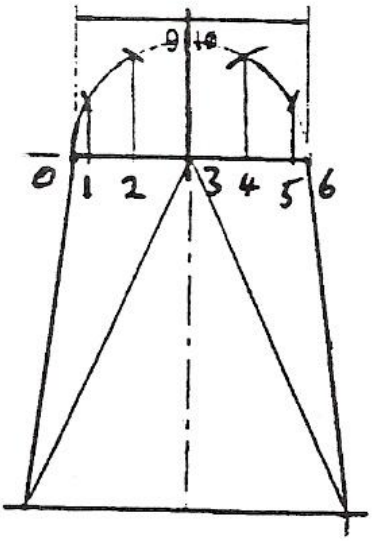

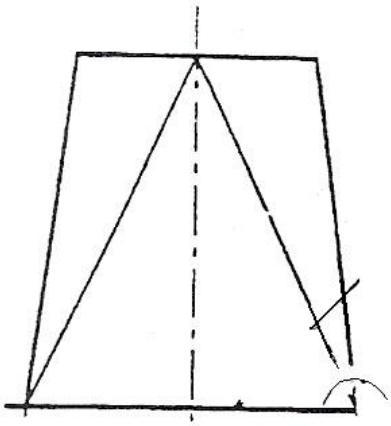

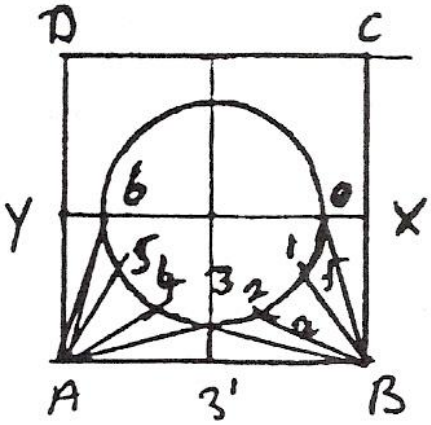

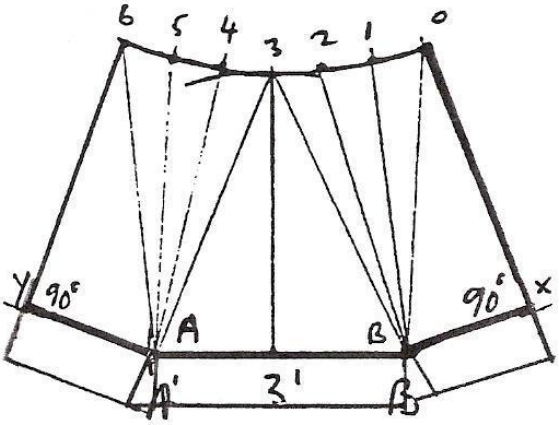

Vertical
Height Scale =

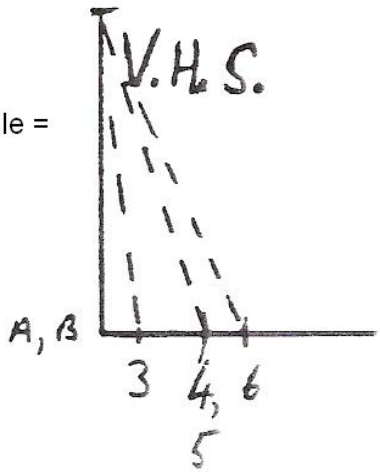

Kink the lines on the bottom of pattern first AB, AY, BX.

This will help keep bottom part from curving.

1. We use triangulation to develop square to round patterns. The golden rule of triangulation is plan length against vertical height. The diagonal No.1 is the true length.

2. Put line A B down and from the middle of it draw 3^1 - 3. To get the true length of 3 - 3^1 we need to put the plan length of 3 - 3^1 against the V.H. of the job.

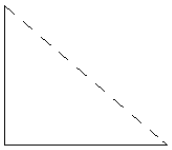

3. We then mark from 3 to 2 and 3 to 4. These are true lengths in the plan. From B and A we swing another arc cutting across 2 and 4. The length of this arc is got by placing plan length of A - 4 against V.H.

4. Step length 4 - 5 from 4 (2-1 is identical). From A swing another arc. Again this arc is got by placing plan length of A - 5 against V.H. (B - 1 is identical).

5. From 5 step length 5 - 6 as in the plan. 1 - 0 is identical from A swing arc which is got by plan length of A=6 against V.H. where arcs cross we have 6. (0 is got by same way from B).

6. Swing arc A - Y (B - X). This is a true length in plan. Next swing arc Y - 6 from 6 to cut arc A - Y. Y - 6 is got by plan length of Y - 6 against V.H.

7. There should be an angle of 90° at X and Y. If not the pattern is wrong. For assembly kink lines BO, B3, A6 and A3 very lightly.

To shape the transformer we kink very slightly the line A - 6, A - 3, B - C and B - 0. We then place the top part of the transformer 6 - 3 and press down to obtain a curved shape resembling a ¼ circle. We do the same for 3 - 0 and the result is we have a ½ pattern with a semi-circle at one end and half a rectangle at the other.

Self Assessment

Questions on Background Notes – Module 4.Unit 10

1. Explain the "Golden Rule" of triangulation.

2. How do we kink the lines when shaping the transformer?

Answers to Questions 1-2. Module 4.Unit 10

1.

In sheet metalwork there are many awkward shapes to be developed. These shapes are broken down into triangles and we develop these triangles one by one to eventually give us our required shape.

The golden rule of triangulation is plan length against vertical height.

2.

It is important to kink all lines only slightly. Most novices tend to over-bend when bending is required. It is much harder to rectify over bending rather than under-bending on a job.

Index

O

On-Centre Square to Round, 9

S

Self Assessment, 12